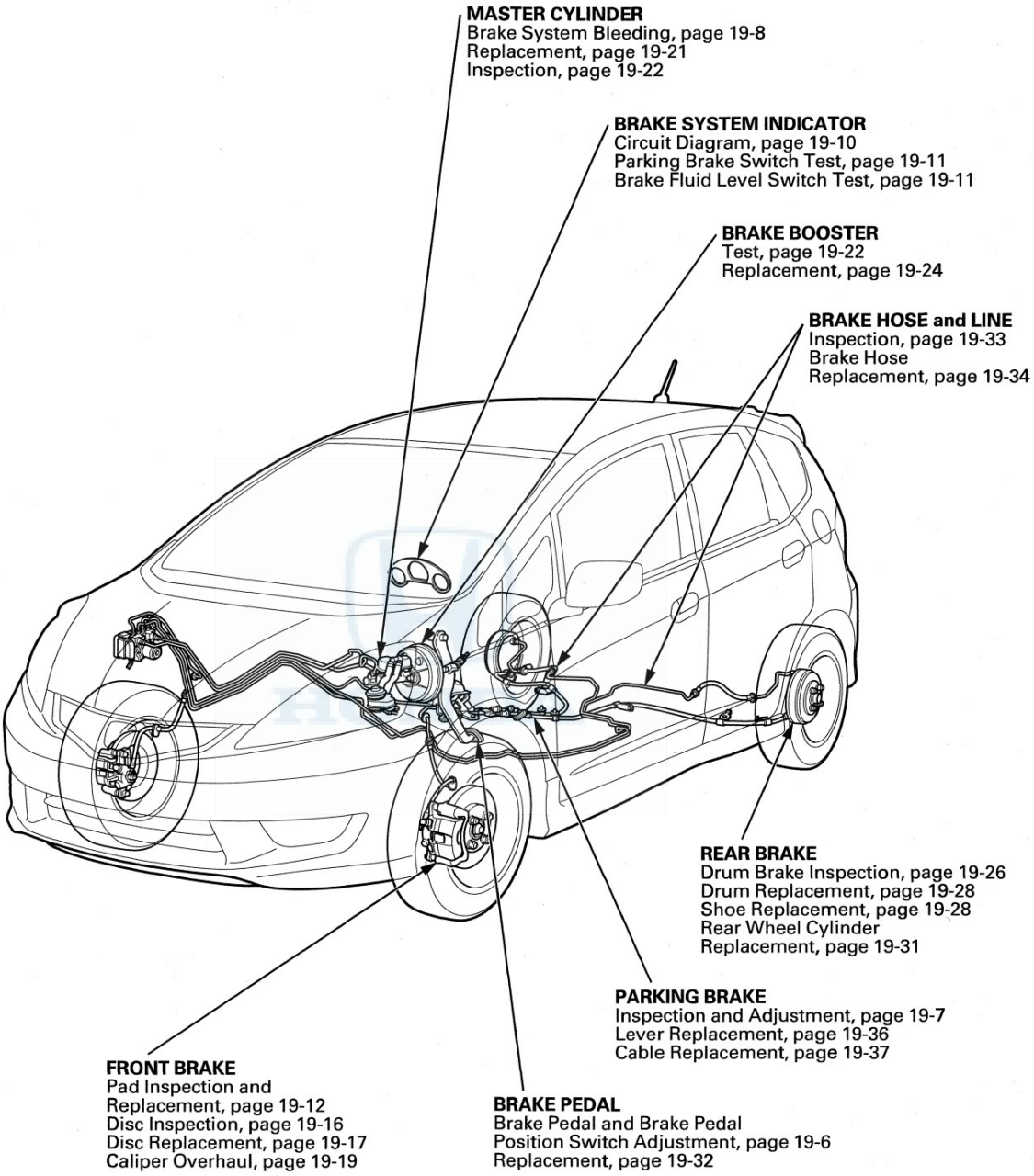Component Location Index