Drive Belt Auto-Tensioner Removal and Installation

Removal/Installation

1. Drive Belt - Remove

2. Drive Belt Auto-Tensioner - Remove

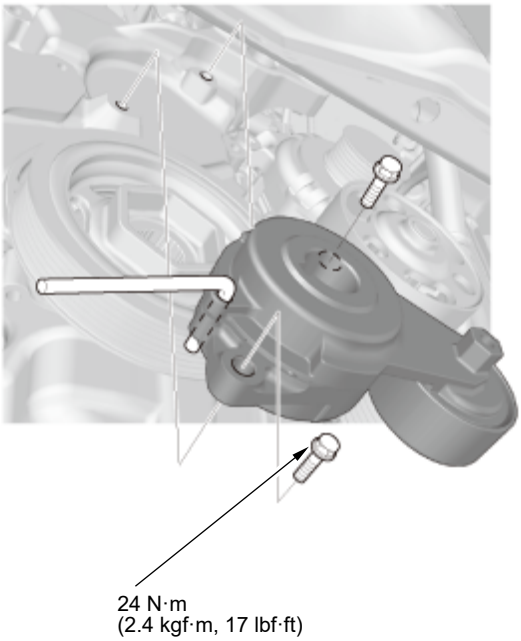

3. All Removed Parts - Install

1. Install the parts in the reverse order of removal.