2019 Honda Fit L4-1.5L (L15B1)

Vehicle > Lighting and Horns > Diagrams > Electrical - Interactive Color (Non OE)
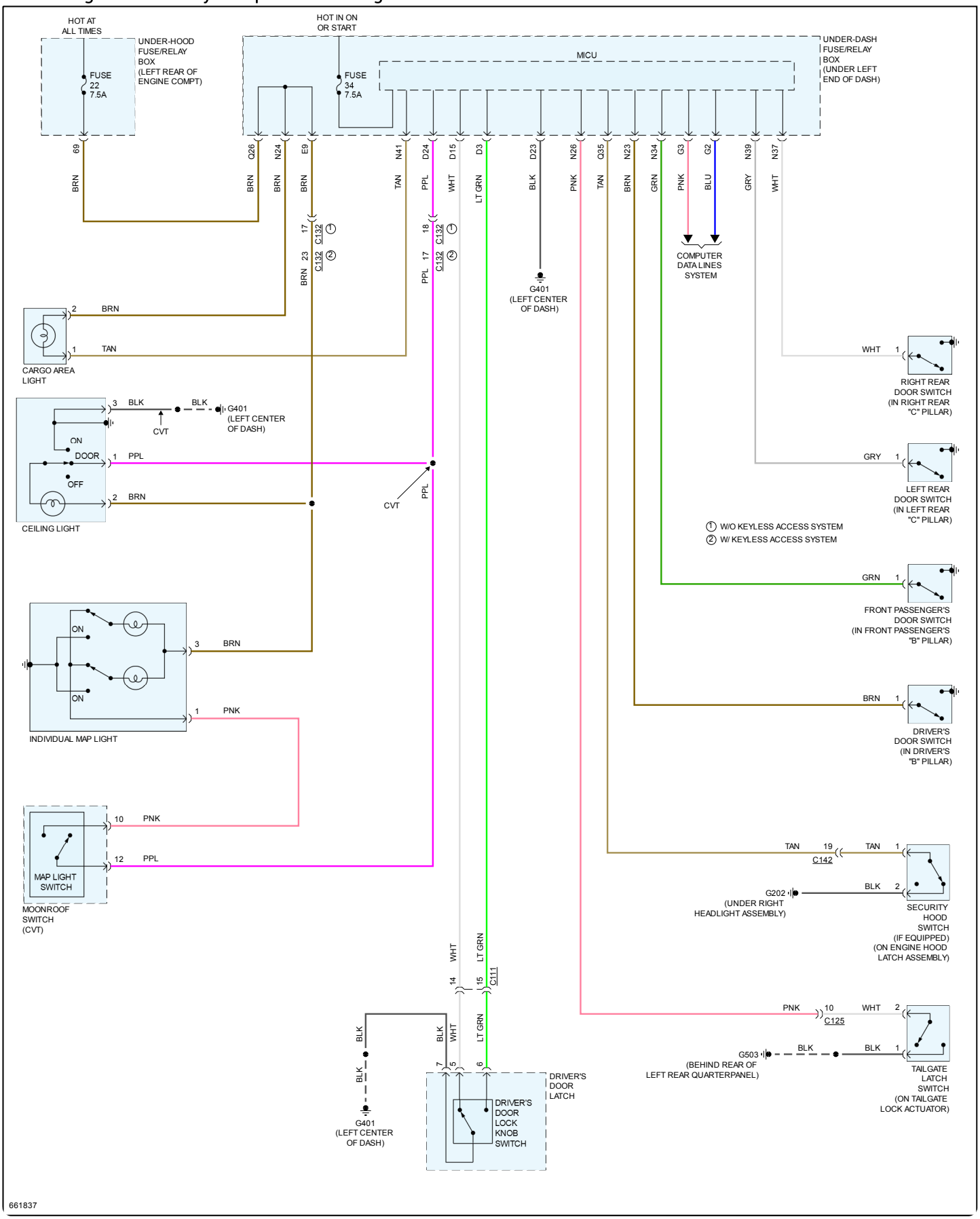
Interior Lights - Courtesy Lamps Circuit - Page 1 of 1